TEA1993TS

GreenChip synchronous rectifier controller

Rev. 1.1 — 14 September 2016 Product data sheet

1 General description

The TEA1993TS is a member of a new generation of Synchronous Rectifier (SR) controller ICs for switched mode power supplies. It includes an adaptive gate drive for maximum efficiency at any load.

The TEA1993TS is a dedicated controller IC for synchronous rectification on the secondary side of flyback converters. It incorporates the sensing stage and driver stage for driving the SR MOSFET, which is rectifying the output of the secondary transformer winding.

The TEA1993TS can generate its own supply voltage for battery charging applications with low output voltage or for applications with high-side rectification.

The TEA1993TS is fabricated in a Silicon-On-Insulator (SOI) process.

2 Features and benefits

2.1 Efficiency features

- Adaptive gate drive for maximum efficiency at any load
- Typical supply current in no-load operation below 200 µA

2.2 Application features

- Operates in a wide output voltage range down to 0 V
- Drain sense pin capable of handling input voltages up to 120 V
- Self-supplying for operation with low output voltage
- Self-supplying for high-side rectification without the use of an auxiliary winding
- Operates with standard and logic level SR MOSFETs
- Supports USB BC, USB PD, and quick charge applications
- TSOP6 package

2.3 Control features

- Adaptive gate drive for fast turn-off at the end of conduction
- UnderVoltage LockOut (UVLO) with active gate pull-down

3 Applications

The TEA1993TS is intended for flyback power supplies. In such applications, it can drive the external synchronous rectifier MOSFET, which replaces the diode for the rectification of the voltage on the secondary winding of the transformer.

It can be used in all power supplies needing high efficiency, like:

- Chargers
- Adapters
- Flyback power supplies with very low and/or variable output voltage

4 Ordering information

Table 1. Ordering information

Type number	Package		
	Name	Description	Version
TEA1993TS/1	TSOP6	plastic surface-mounted package; 6 leads	SOT457

5 Marking

Table 2. Marking codes

Type number	Marking code
TEA1993TS/1	TEA1993

All information provided in this document is subject to legal disclaimers.

© NXP Semiconductors N.V. 2016. All rights reserved.

6 Block diagram

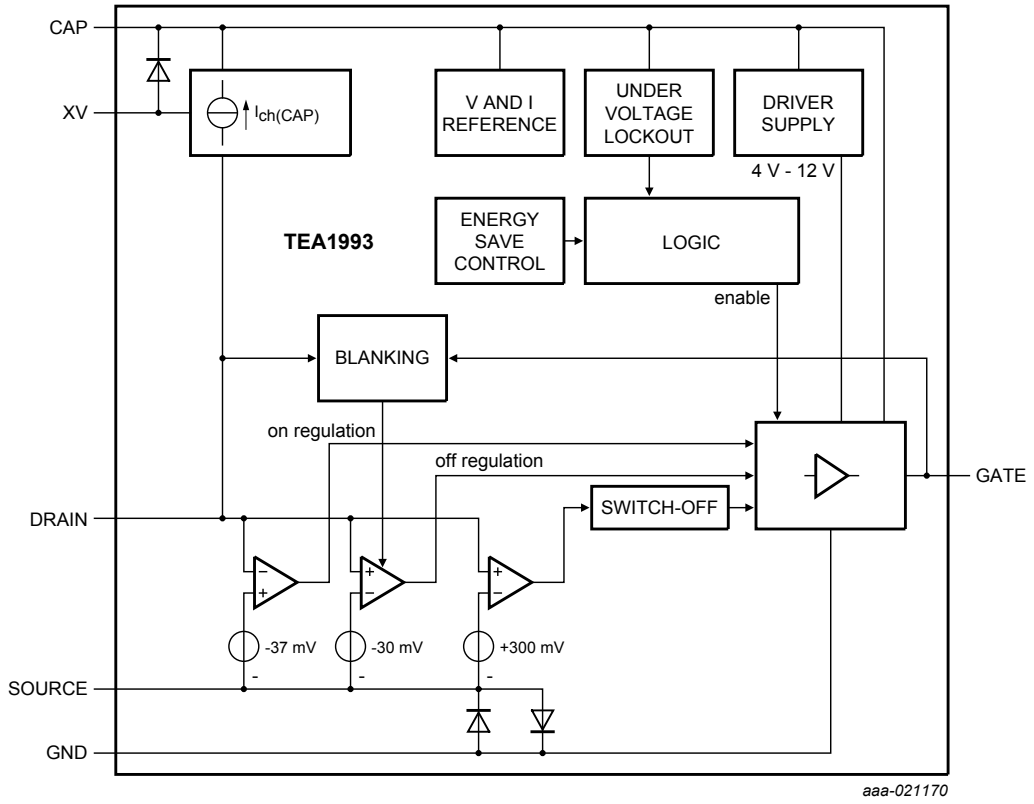

Figure 1. TEA1993TS block diagram

All information provided in this document is subject to legal disclaimers.

© NXP Semiconductors N.V. 2016. All rights reserved.

7 Pinning information

7.1 Pinning

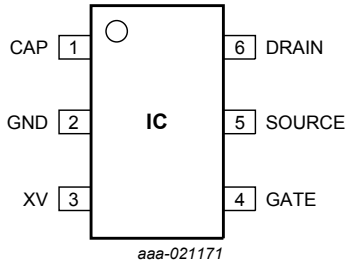

Figure 2. TEA1993TS pin configuration (SOT457)

7.2 Pin description

Table 3. Pin description

Symbol	Pin	Description
CAP	1	capacitor input for internal supply voltage
GND	2	ground
XV	3	external supply input
GATE	4	gate driver output for SR MOSFET
SOURCE	5	source sense input of SR MOSFET
DRAIN	6	drain sense input of SR MOSFET

All information provided in this document is subject to legal disclaimers.

© NXP Semiconductors N.V. 2016. All rights reserved.

8 Functional description

8.1 Introduction

The TEA1993TS is a controller IC for Synchronous Rectification (SR) in flyback applications. It can drive the external synchronous rectifier MOSFET for the rectification of the voltage on the secondary winding of the transformer. Figure 3 shows a typical configuration.

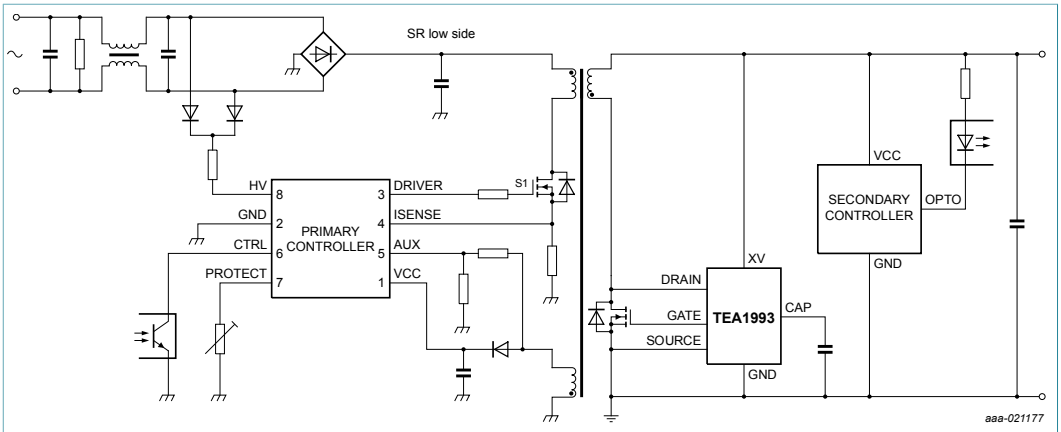

Figure 3. TEA1993TS configuration with low-side rectification

8.2 Start-up and UnderVoltage LockOut (UVLO; CAP and XV pins)

The capacitor on the CAP pin supplies the TEA1993TS. It is charged via the DRAIN pin when the XV voltage is < 4.7 V. The charge current ($I_{ch(CAP)}$) charges the capacitor to 4 V. When this voltage is reached, it stops charging. If the external voltage exceeds 4.7 V, the XV pin increases the capacitor voltage via an integrated diode. The increase of the capacitor voltage gives a higher gate driver voltage ($V_{G(max)}$).

When the voltage on the CAP pin exceeds $V_{start(CAP)}$ (3.7 V typical), the IC leaves the UVLO state and activates the synchronous rectifier circuitry. When the voltage drops to below 3.6 V (typical), the UVLO state is reentered and the SR MOSFET gate driver output is actively kept low.

8.3 Drain sense (DRAIN pin)

The drain sense pin is an input pin capable of handling input voltages up to 120 V. At a positive drain sense voltage, the gate driver is in off-mode with the gate driver pulled down (pin GATE). At a negative drain sense voltage, the IC enables the Synchronous Rectification (SR) by sensing the drain source differential voltage.

All information provided in this document is subject to legal disclaimers.

© NXP Semiconductors N.V. 2016. All rights reserved.

8.4 Synchronous rectification (DRAIN and SOURCE pins)

The IC senses the voltage difference between the drain sense (DRAIN pin) and the source sense (SOURCE pin) connections. This drain source differential voltage of the SR MOSFET is used to drive the gate of the SR MOSFET.

In the regulation phase, the IC regulates the difference between the drain and the source sense inputs to an absolute level of 37 mV. When the absolute difference exceeds 37 mV ($V_{reg(drv)}$), the gate driver output increases the gate voltage of the external SR MOSFET until the 37 mV level is reached. The SR MOSFET does not switch off at low current. To avoid that the device switches off because of ringing, a minimum on-time of 1.5 µs ($t_{tact(sr)(min)}$) is integrated.

When the absolute difference is < 30 mV, the gate driver output decreases the gate voltage of the external SR MOSFET. The voltage waveform on the SR MOSFET gate follows the waveform of the current through the SR MOSFET. When the current through the SR MOSFET reaches zero, the SR MOSFET is quickly switched off.

After SR MOSFET switch-off, the drain voltage increases. When the drain voltage exceeds 300 mV, a low ohmic gate pull-down of 7 Ω keeps the gate of the SR MOSFET switched off.

8.5 Gate driver (GATE pin)

The gate driver circuit charges the gate of the external SR MOSFET during the rising part of the current. The driver circuit discharges the gate during the falling part of the current. The gate driver has a source capability of typically 0.50 A and a sink capability of typically 0.65 A, allowing fast turn-on and fast turn-off of the external SR MOSFET.

The maximum output voltage of the driver is limited to 12 V. This high output voltage drives all MOSFET brands to the minimum on-state resistance. In applications where the IC is supplied with 5 V, the maximum output voltage of the driver is 4.2 V and logic level SR MOSFETs can be used (see Figure 3).

The IC is self-supplying in applications with high-side rectification or in battery charging applications with an output voltage below 4.7 V. When the XV pin is connected to ground for driving standard SR MOSFETs, the driver is regulated to 9 V. When the XV pin is connected to the converter output for driving logic-level SR MOSFETs, the driver is regulated to 4 V if the output voltage is below 4.7 V.

All information provided in this document is subject to legal disclaimers.

© NXP Semiconductors N.V. 2016. All rights reserved.

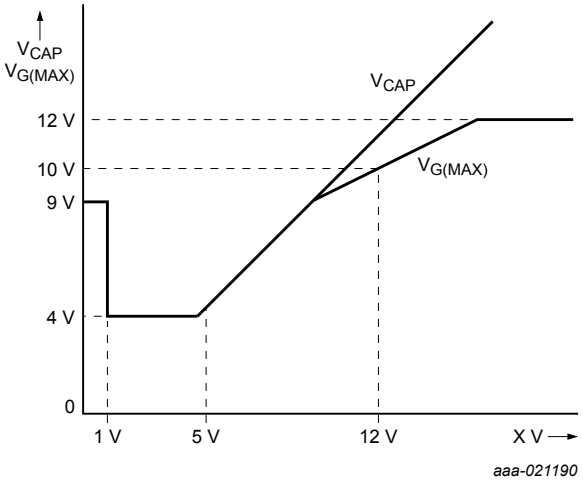

Figure 4. Maximum gate voltage $V_{G(max)}$

During start-up conditions ($V_{CAP} < V_{start(CAP)}$) and UVLO, the driver output voltage is actively pulled low.

8.6 Source sense (SOURCE pin)

The IC is equipped with an additional source sense pin (SOURCE). This pin is used for measuring the drain-to-source voltage of the external SR MOSFET. The source sense input must be connected as close as possible to the SOURCE pin of the external SR MOSFET. It minimizes errors, caused by voltage differences on PCB tracks due to parasitic inductance in combination with large dI/dt values.

All information provided in this document is subject to legal disclaimers.

© NXP Semiconductors N.V. 2016. All rights reserved.

9 Limiting values

Table 4. Limiting values

In accordance with the Absolute Maximum Rating System (IEC 60134). All voltages are measured with respect to ground (pin 2); positive currents flow into the chip. Voltage ratings are valid provided other ratings are not violated; current ratings are valid provided the other ratings are not violated.

Symbol	Parameter	Conditions		Min	Max	Unit
Voltages						
V_{XV}	voltage on pin XV			−0.4	+38	V
$V_{sense(DRAIN)}$	sense voltage on pin DRAIN			−0.8	+120	V
$V_{sense(SOURCE)}$	sense voltage on pin SOURCE			−0.4	+0.4	V
Currents						
I_{XV}	current on pin XV	peak current		-	0.5	A
General						
P_{tot}	total power dissipation	T_{amb} = 90 °C		-	300	mW
T_{stg}	storage temperature			−55	+150	°C
T_j	junction temperature			−40	+150	°C
ElectroStatic Discharge (ESD)						
V_{ESD}	electrostatic discharge voltage	class 2				
		human body model	[1]	-	2000	V
		charged device model		-	500	V

[1] Equivalent to discharging a 100 pF capacitor through a 1.5 kΩ series resistor.

10 Thermal characteristics

Table 5. Thermal characteristics

Symbol	Parameter	Conditions	Typ	Unit
$R_{th(j-a)}$	thermal resistance from junction to ambient	JEDEC test board	200	K/W
$R_{th(j-c)}$	thermal resistance from junction to case	JEDEC test board	115	K/W

All information provided in this document is subject to legal disclaimers.

© NXP Semiconductors N.V. 2016. All rights reserved.

11 Characteristics

Table 6. Characteristics

−25 °C < T_j < +125 °C; V_{xv} = 12 V; C_{CAP} = 1 µF; C_{GATE} = 10 nF (capacitor between the GATE and the GND pins); all voltages are measured with respect to ground (pin 2); currents are positive when flowing into the IC; unless otherwise specified. Limits are production tested at 25 °C. Statistical characterization in the temperature operating range ensure these limits.

Symbol	Parameter	Conditions		Min	Typ	Max	Unit
Supply voltage management (XV and CAP pins)							
$V_{start(CAP)}$	start voltage on pin CAP	V_{XV} = 0 V		3.55	3.70	3.90	V
$V_{stop(CAP)}$	stop voltage on pin CAP	V_{XV} = 0 V		3.45	3.60	3.80	V
$I_{ch(CAP)}$	charge current on pin CAP	V_{XV} = 0 V; V_{CAP} = 7 V; V_{DRAIN} = 12 V; T_j = 25 °C		−95	−70	−50	mA
		V_{XV} = 2 V; V_{CAP} = 3.65 V; V_{DRAIN} = 12 V; T_j = 25 °C		−95	−70	−50	mA
$V_{I(CAP)}$	input voltage on pin CAP	V_{XV} = 0 V; V_{DRAIN} = 12 V		8.70	9.20	9.60	V
		V_{XV} = 2 V; V_{DRAIN} = 12 V		3.80	4.00	4.15	V
		V_{XV} = 5 V		4.15	4.30	4.75	V
		V_{XV} = 12 V		11.0	11.3	11.7	V
$I_{I(XV)}$	input current on pin XV	power save operation; V_{XV} = 5 V		90	160	250	µA
		normal operation; without gate charge; V_{XV} = 5 V; T_j = 25 °C		1.35	1.60	1.85	mA
Synchronous rectification sense input (DRAIN and SOURCE pins)							
$V_{reg(drv)}$	driver regulation voltage	V_{SOURCE} = 0 V; T_j = 25 °C		−40	−37	−35	mV
V_{swoff}	switch-off voltage	V_{SOURCE} = 0 V; T_j = 25 °C		200	300	400	mV
$t_{d(act)(drv)}$	driver activation delay time	V_{SOURCE} = 0 V; normal operation; time for step on V_{DRAIN} (2 V to −0.5 V) to rising of V_{GATE} at 10 % of end value		-	65	-	ns
$t_{d(deact)(drv)}$	driver deactivation delay time	V_{SOURCE} = 0 V; normal operation; time for step on V_{DRAIN} (−0.5 V to 2 V) to falling of V_{GATE} at 10 % begin value		-	40	-	ns
$t_{act(sr)(min)}$	minimum synchronous rectification active time	V_{XV} = V_{CAP} = 5 V; T_j = 25 °C		1.20	1.50	1.80	µs
Gate driver (GATE pin)							

All information provided in this document is subject to legal disclaimers.

© NXP Semiconductors N.V. 2016. All rights reserved.

Symbol	Parameter	Conditions		Min	Typ	Max	Unit
I_{source}	source current	peak curent					
		V_{XV} = 5 V; V_{ds} = −0.5 V; V_g = 0 V		-	−0.13	-	A
		V_{XV} = 12 V; V_{ds} = −0.5 V; V_g = 0 V		-	−0.50	-	A
I_{sink}	sink current	regulation current					
		V_{XV} = 5 V; V_{ds} = 0 V; V_g = 4 V		-	150	-	mA
		V_{XV} = 12 V; V_{ds} = 0 V; V_g = 10 V		-	210	-	mA
		peak current					
		V_{XV} = 5 V; V_{ds} = 4 V; V_g = 4 V		-	0.35	-	A
		V_{XV} = 12 V; V_{ds} = 4 V; V_g = 4 V		-	0.65	-	A
$R_{pd(G)}$	gate pull-down resistance	V_{DRAIN} = 4 V; I_{GATE} = 30 mA; V_{XV} = 12 V; T_j = 25 °C		6.00	6.80	7.60	Ω
$V_{G(max)}$	maximum gate voltage	V_{XV} = 0 V		7.80	8.90	9.60	V
		V_{XV} = 2 V		3.75	3.95	4.15	V
		V_{XV} = 5 V		4.00	4.20	4.40	V
		V_{XV} = V_{CAP} = 5 V		4.90	4.95	5.00	V
		V_{XV} = 12 V		9.40	9.80	10.70	V
		V_{XV} = 18 V to 38 V		11.80	12.30	12.70	V

All information provided in this document is subject to legal disclaimers.

© NXP Semiconductors N.V. 2016. All rights reserved.

11.1 Temperature curves

11.1.1 Charge current (CAP pin)

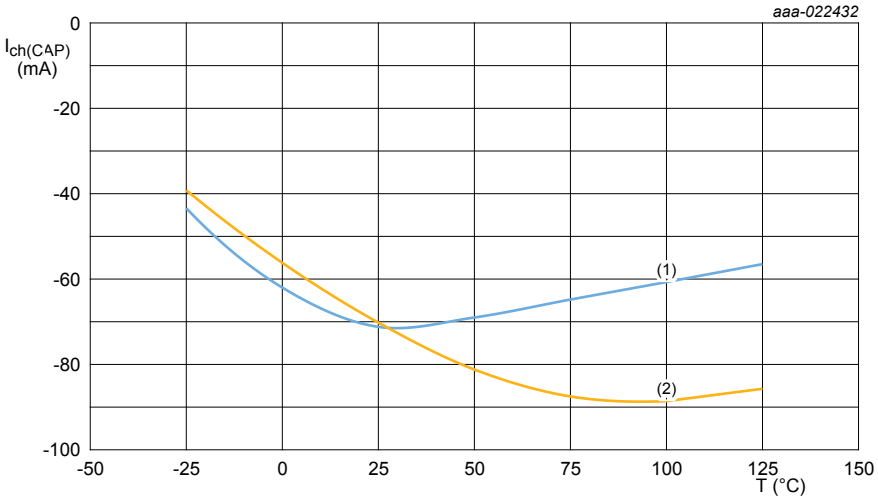

(1) $I_{ch(CAP)}$ at V_{CAP} = 7 V; V_{XV} = 0 V
(2) $I_{ch(CAP)}$ at V_{CAP} = 3.65 V; V_{XV} = 2 V

Figure 5. $I_{ch(CAP)}$ as a function of temperature

11.1.2 Operating current (XV pin)

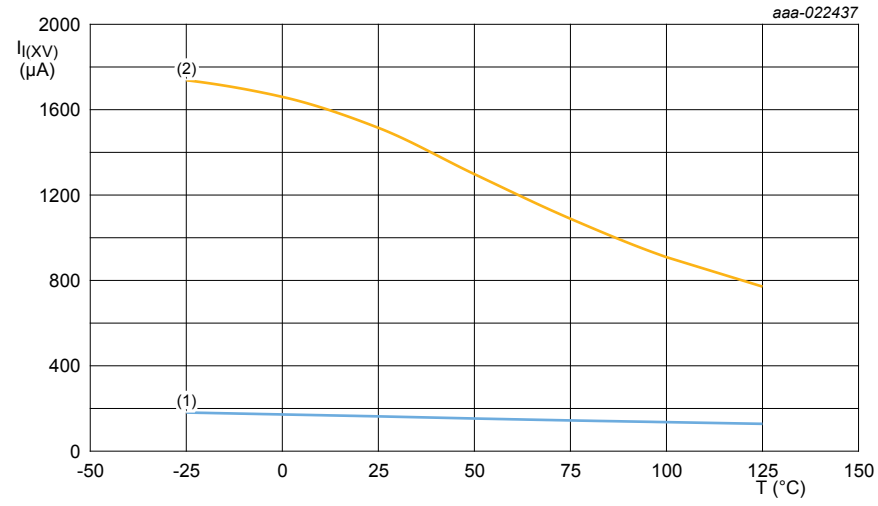

(1) $I_{I(XV)}$ - power save operation
(2) $I_{I(XV)}$ - normal operation

Figure 6. $I_{I(XV)}$ as a function of temperature

All information provided in this document is subject to legal disclaimers.

© NXP Semiconductors N.V. 2016. All rights reserved.

11.1.3 Driver regulation voltage

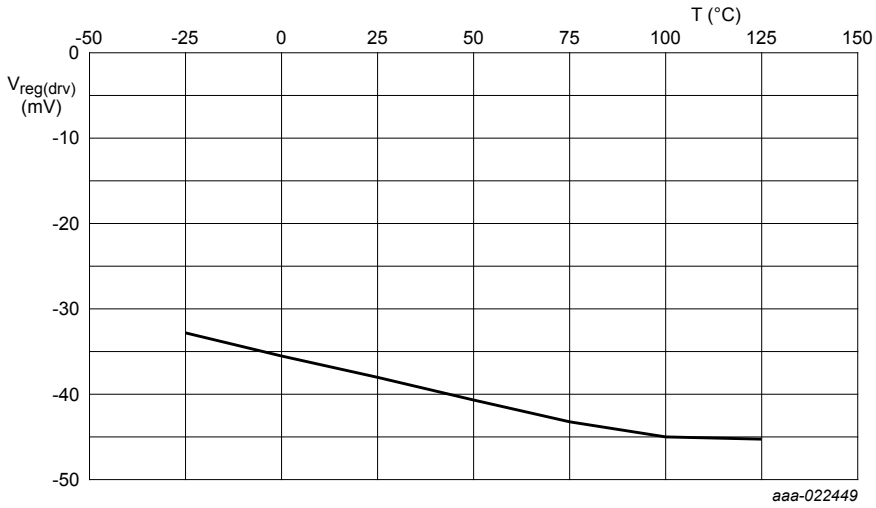

Figure 7. $V_{reg(drv)}$ as a function of temperature

11.1.4 Gate pull-down resistance

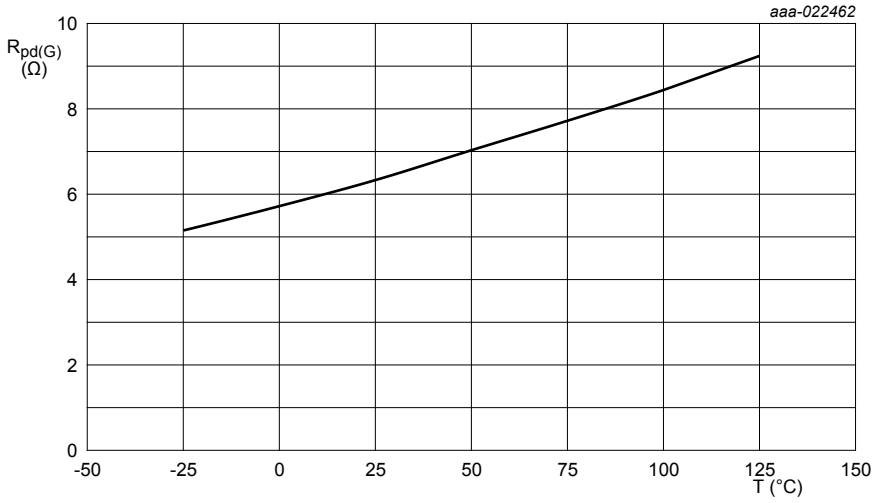

Figure 8. $R_{pd(G)}$ as a function of temperature

All information provided in this document is subject to legal disclaimers.

© NXP Semiconductors N.V. 2016. All rights reserved.

11.1.5 Switch-off voltage

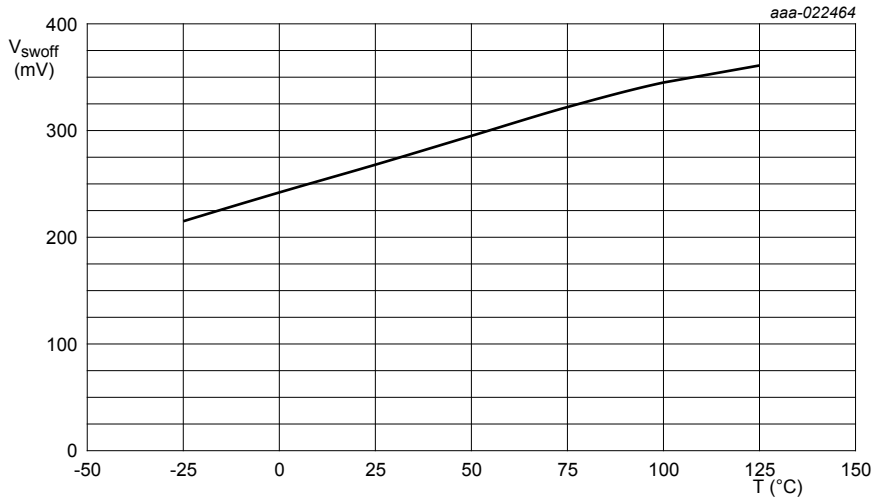

Figure 9. V_{swoff} as a function of temperature

11.1.6 Minimum synchronous rectification active time

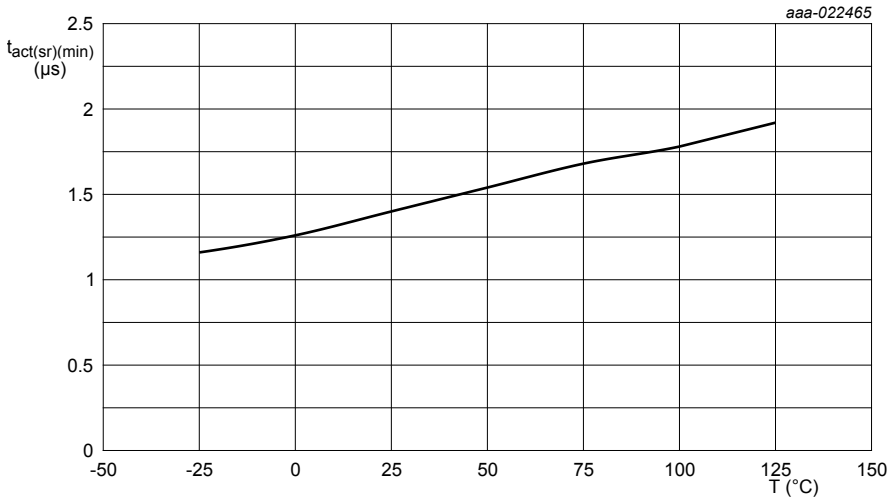

Figure 10. $t_{act(sr)min}$ as a function of temperature

All information provided in this document is subject to legal disclaimers.

© NXP Semiconductors N.V. 2016. All rights reserved.

12 Application information

A flyback switched mode power supply with the TEA1993TS consists of a primary side controller with a primary switch, a transformer, and an output stage. To obtain low conduction loss rectification, an SR MOSFET is used in the output stage. The SR MOSFET can be placed low-side (see Figure 3) or can be placed high-side (see Figure 11). In the high-side application, the TEA1993TS is self-supplying. The capacitor on the CAP pin supplies the TEA1993TS. When the drain voltage is positive, it is charged via the DRAIN pin.

The gate drive voltage for the synchronous rectifier switch is derived from the voltage difference between the corresponding drain sense and source sense pins.

Special attention must be paid to the connection of the drain sense and source sense pins. The voltages measured on these pins are used for the gate drive voltage. Wrong measurement results in a less efficient gate drive because a gate voltage that is either too low or too high. The connections to these pins must not interfere with the power wiring.

The power wiring conducts currents with high dI/dt values. It can easily cause measurement errors resulting from induced voltages due to parasitic inductances. The separate source sense pins make it possible to sense the source voltage of the external MOSFETs directly. So, the current carrying power ground tracks are not required.

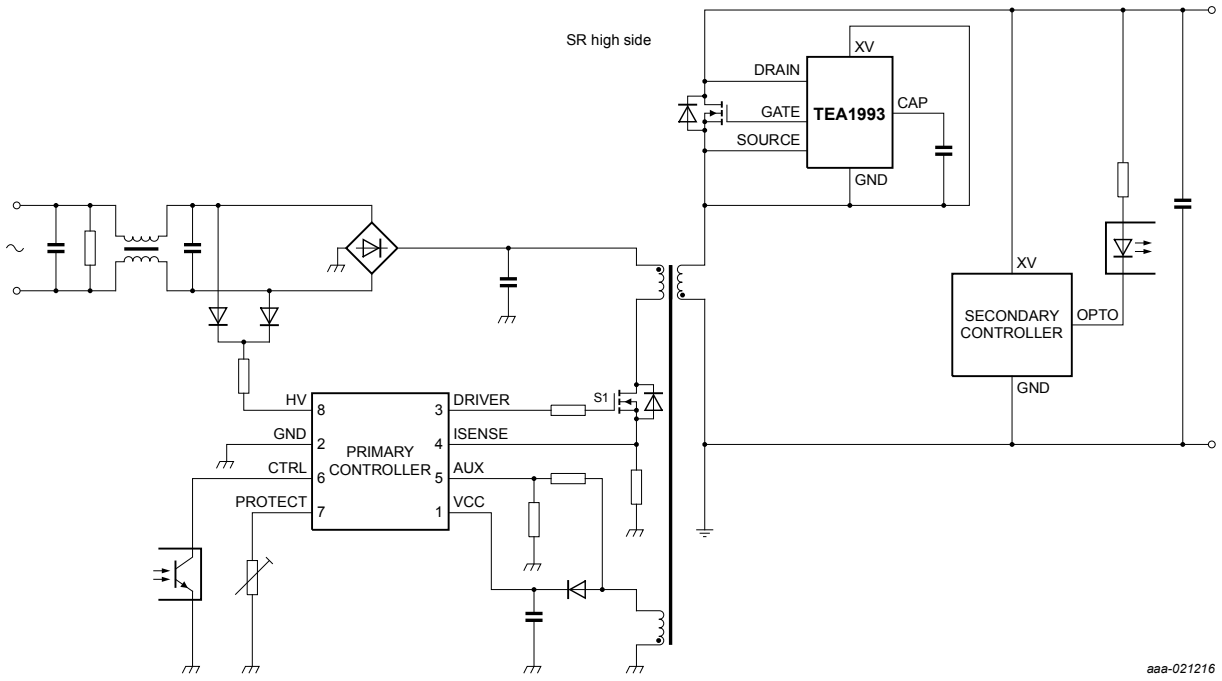

Figure 11. TEA1993TS configuration with high-side rectification

All information provided in this document is subject to legal disclaimers.

© NXP Semiconductors N.V. 2016. All rights reserved.

13 Package outline

Table 7.

Plastic surface-mounted package (TSOP6); 6 leads **SOT457**

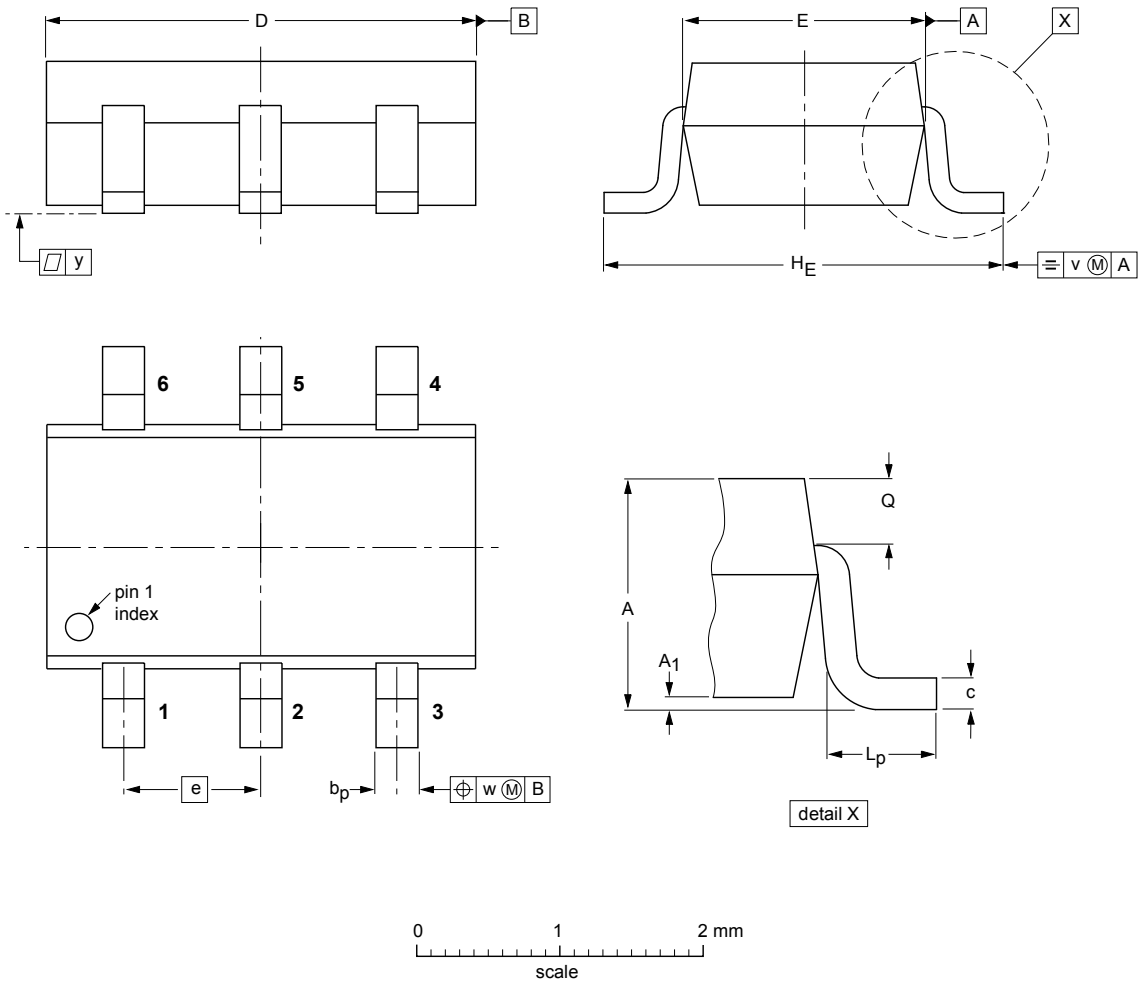

DIMENSIONS (mm are the original dimensions)

UNIT	A	A_1	b_p	c	D	E	e	H_E	L_p	Q	v	w	y
mm	1.1 0.9	0.1 0.013	0.40 0.25	0.26 0.10	3.1 2.7	1.7 1.3	0.95	3.0 2.5	0.6 0.2	0.33 0.23	0.2	0.2	0.1

OUTLINE VERSION	REFERENCES				EUROPEAN PROJECTION	ISSUE DATE
	IEC	JEDEC	JEITA			
SOT457			SC-74			~~05-11-07~~ 06-03-16

Figure 12. Package outline SOT457 (TSOP6)

All information provided in this document is subject to legal disclaimers.

© NXP Semiconductors N.V. 2016. All rights reserved.

14 Revision history

Table 8. Revision history

Document ID	Release date	Data sheet status	Change notice	Supersedes
TEA1993TS v.1.1	20160914	Product data sheet	-	TEA1993TS v.1.0
Modifications	• Section 4 has been updated. • Section 5 has been added.			
TEA1993TS v.1.0	20160531	Product data sheet	-	-

All information provided in this document is subject to legal disclaimers.

© NXP Semiconductors N.V. 2016. All rights reserved.

15 Legal information

15.1 Data sheet status

Document status[1][2]	Product status[3]	Definition
Objective [short] data sheet	Development	This document contains data from the objective specification for product development.
Preliminary [short] data sheet	Qualification	This document contains data from the preliminary specification.
Product [short] data sheet	Production	This document contains the product specification.

[1] Please consult the most recently issued document before initiating or completing a design.
[2] The term 'short data sheet' is explained in section "Definitions".
[3] The product status of device(s) described in this document may have changed since this document was published and may differ in case of multiple devices. The latest product status information is available on the Internet at URL http://www.nxp.com.

15.2 Definitions

Draft — The document is a draft version only. The content is still under internal review and subject to formal approval, which may result in modifications or additions. NXP Semiconductors does not give any representations or warranties as to the accuracy or completeness of information included herein and shall have no liability for the consequences of use of such information.

Short data sheet — A short data sheet is an extract from a full data sheet with the same product type number(s) and title. A short data sheet is intended for quick reference only and should not be relied upon to contain detailed and full information. For detailed and full information see the relevant full data sheet, which is available on request via the local NXP Semiconductors sales office. In case of any inconsistency or conflict with the short data sheet, the full data sheet shall prevail.

Product specification — The information and data provided in a Product data sheet shall define the specification of the product as agreed between NXP Semiconductors and its customer, unless NXP Semiconductors and customer have explicitly agreed otherwise in writing. In no event however, shall an agreement be valid in which the NXP Semiconductors product is deemed to offer functions and qualities beyond those described in the Product data sheet.

15.3 Disclaimers

Limited warranty and liability — Information in this document is believed to be accurate and reliable. However, NXP Semiconductors does not give any representations or warranties, expressed or implied, as to the accuracy or completeness of such information and shall have no liability for the consequences of use of such information. NXP Semiconductors takes no responsibility for the content in this document if provided by an information source outside of NXP Semiconductors. In no event shall NXP Semiconductors be liable for any indirect, incidental, punitive, special or consequential damages (including - without limitation - lost profits, lost savings, business interruption, costs related to the removal or replacement of any products or rework charges) whether or not such damages are based on tort (including negligence), warranty, breach of contract or any other legal theory. Notwithstanding any damages that customer might incur for any reason whatsoever, NXP Semiconductors' aggregate and cumulative liability towards customer for the products described herein shall be limited in accordance with the Terms and conditions of commercial sale of NXP Semiconductors.

Right to make changes — NXP Semiconductors reserves the right to make changes to information published in this document, including without limitation specifications and product descriptions, at any time and without notice. This document supersedes and replaces all information supplied prior to the publication hereof.

Suitability for use — NXP Semiconductors products are not designed, authorized or warranted to be suitable for use in life support, life-critical or safety-critical systems or equipment, nor in applications where failure or malfunction of an NXP Semiconductors product can reasonably be expected to result in personal injury, death or severe property or environmental damage. NXP Semiconductors and its suppliers accept no liability for inclusion and/or use of NXP Semiconductors products in such equipment or applications and therefore such inclusion and/or use is at the customer's own risk.

Applications — Applications that are described herein for any of these products are for illustrative purposes only. NXP Semiconductors makes no representation or warranty that such applications will be suitable for the specified use without further testing or modification. Customers are responsible for the design and operation of their applications and products using NXP Semiconductors products, and NXP Semiconductors accepts no liability for any assistance with applications or customer product design. It is customer's sole responsibility to determine whether the NXP Semiconductors product is suitable and fit for the customer's applications and products planned, as well as for the planned application and use of customer's third party customer(s). Customers should provide appropriate design and operating safeguards to minimize the risks associated with their applications and products. NXP Semiconductors does not accept any liability related to any default, damage, costs or problem which is based on any weakness or default in the customer's applications or products, or the application or use by customer's third party customer(s). Customer is responsible for doing all necessary testing for the customer's applications and products using NXP Semiconductors products in order to avoid a default of the applications and the products or of the application or use by customer's third party customer(s). NXP does not accept any liability in this respect.

Limiting values — Stress above one or more limiting values (as defined in the Absolute Maximum Ratings System of IEC 60134) will cause permanent damage to the device. Limiting values are stress ratings only and (proper) operation of the device at these or any other conditions above those given in the Recommended operating conditions section (if present) or the Characteristics sections of this document is not warranted. Constant or repeated exposure to limiting values will permanently and irreversibly affect the quality and reliability of the device.

Terms and conditions of commercial sale — NXP Semiconductors products are sold subject to the general terms and conditions of commercial sale, as published at http://www.nxp.com/profile/terms, unless otherwise agreed in a valid written individual agreement. In case an individual agreement is concluded only the terms and conditions of the respective agreement shall apply. NXP Semiconductors hereby expressly objects to applying the customer's general terms and conditions with regard to the purchase of NXP Semiconductors products by customer.

No offer to sell or license — Nothing in this document may be interpreted or construed as an offer to sell products that is open for acceptance or the grant, conveyance or implication of any license under any copyrights, patents or other industrial or intellectual property rights.

All information provided in this document is subject to legal disclaimers.

© NXP Semiconductors N.V. 2016. All rights reserved.

Quick reference data — The Quick reference data is an extract of the product data given in the Limiting values and Characteristics sections of this document, and as such is not complete, exhaustive or legally binding.

Export control — This document as well as the item(s) described herein may be subject to export control regulations. Export might require a prior authorization from competent authorities.

Non-automotive qualified products — Unless this data sheet expressly states that this specific NXP Semiconductors product is automotive qualified, the product is not suitable for automotive use. It is neither qualified nor tested in accordance with automotive testing or application requirements. NXP Semiconductors accepts no liability for inclusion and/or use of non-automotive qualified products in automotive equipment or applications. In the event that customer uses the product for design-in and use in automotive applications to automotive specifications and standards, customer (a) shall use the product without NXP Semiconductors' warranty of the product for such automotive applications, use and specifications, and (b) whenever customer uses the product for automotive applications beyond NXP Semiconductors' specifications such use shall be solely at customer's own risk, and (c) customer fully indemnifies NXP Semiconductors for any liability, damages or failed product claims resulting from customer design and use of the product for automotive applications beyond NXP Semiconductors' standard warranty and NXP Semiconductors' product specifications.

Translations — A non-English (translated) version of a document is for reference only. The English version shall prevail in case of any discrepancy between the translated and English versions.

15.4 Trademarks

Notice: All referenced brands, product names, service names and trademarks are the property of their respective owners.

GreenChip — is a trademark of NXP Semiconductors N.V.

All information provided in this document is subject to legal disclaimers.

© NXP Semiconductors N.V. 2016. All rights reserved.

Tables

Tab. 1. Ordering information 2
Tab. 2. Marking codes 2
Tab. 3. Pin description 4
Tab. 4. Limiting values 8
Tab. 5. Thermal characteristics 8
Tab. 6. Characteristics 9
Tab. 7. 15
Tab. 8. Revision history 16

Figures

Fig. 1. TEA1993TS block diagram 3
Fig. 2. TEA1993TS pin configuration (SOT457) 4
Fig. 3. TEA1993TS configuration with low-side rectification 5
Fig. 4. Maximum gate voltage VG(max) 7
Fig. 5. Ich(CAP) as a function of temperature 11
Fig. 6. II(XV) as a function of temperature 11
Fig. 7. Vreg(drv) as a function of temperature 12
Fig. 8. Rpd(G) as a function of temperature 12
Fig. 9. Vswoff as a function of temperature 13
Fig. 10. tact(sr)min as a function of temperature 13
Fig. 11. TEA1993TS configuration with high-side rectification 14
Fig. 12. Package outline SOT457 (TSOP6) 15

All information provided in this document is subject to legal disclaimers.

© NXP Semiconductors N.V. 2016. All rights reserved.

Contents

1 General description 1
2 Features and benefits 1
2.1 Efficiency features 1
2.2 Application features 1
2.3 Control features 1
3 Applications 2
4 Ordering information 2
5 Marking 2
6 Block diagram 3
7 Pinning information 4
7.1 Pinning 4
7.2 Pin description 4
8 Functional description 5
8.1 Introduction 5
8.2 Start-up and UnderVoltage LockOut (UVLO; CAP and XV pins) 5
8.3 Drain sense (DRAIN pin) 5
8.4 Synchronous rectification (DRAIN and SOURCE pins) 6
8.5 Gate driver (GATE pin) 6
8.6 Source sense (SOURCE pin) 7
9 Limiting values 8
10 Thermal characteristics 8
11 Characteristics 9
11.1 Temperature curves 11
11.1.1 Charge current (CAP pin) 11
11.1.2 Operating current (XV pin) 11
11.1.3 Driver regulation voltage 12
11.1.4 Gate pull-down resistance 12
11.1.5 Switch-off voltage 13
11.1.6 Minimum synchronous rectification active time 13
12 Application information 14
13 Package outline 15
14 Revision history 16
15 Legal information 17

Please be aware that important notices concerning this document and the product(s) described herein, have been included in section 'Legal information'.

© NXP Semiconductors N.V. 2016. **All rights reserved.**

For more information, please visit: http://www.nxp.com
For sales office addresses, please send an email to: salesaddresses@nxp.com

Date of release: 14 September 2016
Document identifier: TEA1993TS